10/100BASE-TX TRANSFORMER MODULES

Features:

- Designed to meet IEEE 802.3 requirements.
- Designed for multiport repeater & ethernet switching hub application.

Specifications: at 25 degree C.

- Primary inductance (LP): 350uHmin.@100KHz,0.1Vrms,8mA .

Part NO	Turn Ratio RX.TX	Insertion Loss (dB max) 0.1-100MHz	Return Loss(dB min .) MHz			DCMR (dB Min) MHz		Crosstalk (dB min .) MHz				Isolation Voltage (Vrms)
			2-30	60	80	1-60	60-200	1	30	60	100	
PHST-1161A	1CT:1CT	-1.0	-18	-14	-12	-37	-25	-55	-45	-40	-33	1500

Dimension: mm(inch)+/-0.25(0.01)

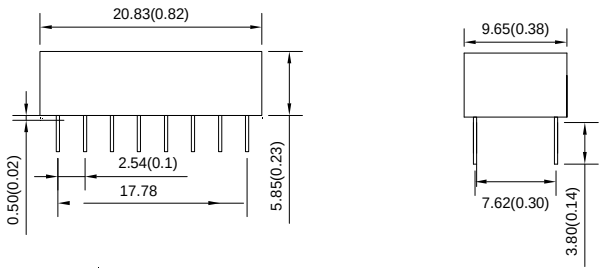
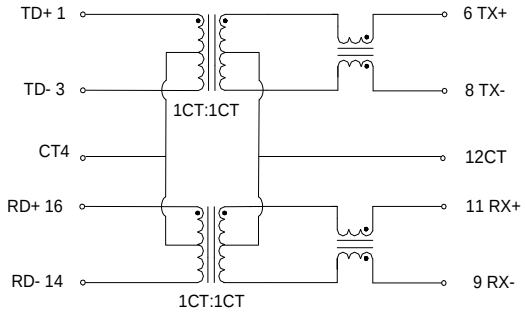
Schematic: